MODULE BUILDING SYSTEMS INC.

> **"What if constructing a building was as efficient and streamlined as assembling a vehicle?"**

MBS utilizes a patent pending post-tensioning technology set to revolutionize the pre-fabricated building and construction industry within the target markets of the 2-12 storey multi-residential, low income housing, affordable housing, hotels, student and senior housing, commercial and industrial buildings, temporary buildings/shelters, and disaster relief efforts.

MBS's building delivery model features a cost competitive, completely finished, and quick to install pre-manufactured "flat-pack" wood panelized solution.
Think IKEA, but for buildings.

our:why

MBS directly supports marginalized communities by manufacturing and assembling sustainable buildings using innovative modular technology.

1.6 billion people have inadequate housing

Our technology and manufacturing based build process is the precursor to revolutionizing the homelessness, humanitarian, and disaster relief efforts around the globe.

By reducing the cost to produce and with the transportability of ready to assemble buildings we bring the ability to quickly and efficiently develop communities around the globe.

This technology can tackle homelessness and affordable housing issues such as long wait lists, crumbling infrastructure, indigenous community developments, disaster relief efforts, and millions in wasted taxes. We are partnering with industry leaders and governments to provide a cost effective and timely solution to these problems.

our:team

Mark Turnbull

Founder & CEO

Mark is the Founder and visionary behind this project. He assembled the executive team, advisors, and partners to bring this venture to fruition. His background includes 17 years of entrepreneurial experience, real estate investment, large scale residential renovation projects, property management, business development, sales, and marketing. Mark is a humanitarian at heart. He has visited Haiti over 10 times building schools, homes, and orphanages.

https://www.linkedin.com/in/markwturnbull/

Lorne Henderson

Chief Technology Officer

Lorne designed our IP (patent pending) and will lead our engineering and design team. He has over 20 years experience in designing lumber manufacturing facilities, fluid power system design, saw mill equipment design, highway tanker truck design, drill rig design, and manufacturing design.

https://www.linkedin.com/in/lorne-henderson-98332213/

Anirudh Ravikumar

Chief Strategy Officer

A people leader with over 15 years of experience spearheading and managing portfolios in cyber, risk, and cloud program management including leading operational management within the fin-tech, banking and government agencies.

Ani has years of experience in: Program & Portfolio Management, Chief of Staff, Data Management, Business Strategy, Cloud Governance, Business Development, Operational Strategy, Customer Success, Communications, and Labor & Talent Management

https://www.linkedin.com/in/anirudh-ravikumar/

our:advisors

Gary Smith

Executive & Business Consultant

A graduate engineer with experience in four verticals (telecommunications, utilities, information technology and construction), gained across three continents (North America, Europe and Asia) in businesses of all sizes, under both Corporate and Private Equity ownership.

An accomplished board level CEO with a track record of fast and effective situation analysis and strategy development in turnaround and business development situations.

https://www.linkedin.com/in/gary-smith-interimexec/

Dr. Mustapha El Moussaoui

Architect

Architect, urbanist, and project manager, passionate about how our built environment is shaping our socio-cultural dynamics. I have been intrigued by the idea of technology and smart cities and how they can impact our built environment by utilizing the best out of these future technologies.
Currently holding a doctorate degree with excellence from the Universitat Politecnica de Valencia.

https://www.linkedin.com/in/mustapha-el-moussaoui-9b821947/

Kyle Pickering

VP & CTO of ONSITE3D

Kyle is the Co-Founder, VP and CTO of ONSITE3D.

Pushing the technical vision of bridging the information gap that has always existed between engineering and construction. Our team is heavily vested in the current market disruption utilizing Virtual Design Construction as the new industry standard of how projects are completed in the Oil and Gas sector. At the backbone of the company, we strive to be Western Canada's premier source for 3D LIDAR data.

https://www.linkedin.com/in/krpickering/

Brian Oliveria

Senior Project Manager

Brian has over 10 years of experience within the civil engineering and project management fields. Brian is currently a senior project manager with Ecora, a large engineering firm focused on land development, civil engineering, and mechanical engineering.

https://www.linkedin.com/in/brian-oliveira-8ba65b174/

Henri Cullinan

Strategic Urbanist & Land Development

Henri has over 28 years of industry experience as a strategic urban planner. He holds a master's degree in urban planning providing community planning and development management services as an independent consultant internationally and now in Western Canada. Over the course of his career, Henri has developed a sound and proficient understanding of strategic planning, city master planning, land economics incorporating business case planning, feasibility and bankability studies.

https://www.linkedin.com/in/henri-cullinan-4a05158/

our:partners

UNITED STATES

orcutt | winslow

DESIGN HOUSE PARTNER
(LOI PENDING)

orcutt | winslow has been creating innovative, functional, and cost-effective designs for the private and public sectors for over 30 years. Which include award-winning designs of Arizona schools. Whether it is architectural design, facilitating public input, master planning, sustainable facilities planning, or interior design, orcutt | winslow brings to each project a sincere concern for each clients needs, budget, vision, and aesthetic goals.

www.owp.com

sweetbio

PILOT PROJECT
(LOI PENDING)

SweetBio® is a Memphis, Tennessee based medical device company specializing in bioengineering honey-incorporated materials for wound care. SweetBio® is a proud alum of the Springboard Enterprises Health Innovation Hub 2019 cohort, graduate of the ZeroTo510 and LaunchTN accelerator programs, finalist in Steve Case's 2018 Rise of the Rest tour and was recently highlighted in Forbes and on 60 Minutes.

www.sweetbio.com

our:partners
CANADA

ECORA IS AN ENGINEERING, ENVIRONMENT & NATURAL RESOURCE CONSULTING COMPANY

Ecora is committed to delivering quality services to their clients. Their incredible team of engineers, environmental scientists and resource professionals work together to provide clients with a synergistic offering of services unique to the industry. They are built on the foundation of our core values; commitment to our people, our relationships, our community and our environment.

www.ecora.ca

ONSITE3D IS A VIRTUAL DESIGN & CONSTRUCTION COMPANY IN CALGARY, AB

They put their clients and project safety first and they make a positive impact across multiple sectors. As Industry leaders, you can trust them to deliver collaborative, sustainable and lean projects built for the future.
ONSITE3D's mission is to apply world class leading technology into conventional workflows by partnering and training highly skilled labour. Injecting the technology strategically into the industry to complete projects better, faster and more cost effective.

www.onsite3d.ca

the:why

We see the future through the eyes of innovation

The building industry is one of the least innovative industries around the world.

We are still constructing buildings on site with long and inaccurate timelines, difficult logistics with multiple trades and companies, cost inefficiencies, large amounts of material waste, and a rapidly shrinking skilled trades workforce.

When was the last time you heard of a construction or major development project being on time and on budget?

We are driven to see the world of lean high capacity manufacturing and land development merged into a dynamic and innovative industry that brings new buildings to market in record time, on budget, and environmentally sustainable.

the:problem

01 CONSTRUCTION TIME

Standard construction takes months, sometimes years to deliver a building. Project timelines are often inaccurate.

02 COST & UNCERTAINTY

Current construction methods are expensive, labour intensive, and wasteful. Project budgets are often inaccurate.

03 QUALITY CONTROL

Projects often have new, untrained, and unknown workers. This makes the quality of each project a gamble. Mistakes = expenses.

our:solution

01 FAST & RELIABLE ASSEMBLY

Know exactly when a project will be delivered. Increase predictability and reduce risk with a consistent and precise product. Our module panel system will assemble a building more than 50% faster than current construction methods. Factory construction time overlaps site development and foundation forming time. Paired with our quick-assembly panel system we can deliver projects in industry record setting time.

02 SAVINGS & PREDICTABILITY

Know exactly how much a project will cost start to finish. Our building method will save our clients time and money on their developments. Prefabricated construction offers improved cost control and predictability.

03 PRECISION QUALITY

Precision increases predictability. Based on innovative manufacturing principles, automated production systems, and an advanced rigorous quality control program, we can eliminate unit defects, on-site change orders, and costly on-site construction mistakes.

the:problem

04 LACK OF SKILLED TRADES

With fewer new workers entering the skilled trade industries, skilled and reliable options in the workforce are unsustainable.

Master Electrician avg age: 40+
Master Plumber avg age: 50+

05 TOO MANY WORKERS

There are an average of 30 trades per project each with their own agendas, crews and material deliveries. This is inefficient, expensive, leads to miscommunication and mistakes, conflict between trades, and lack of accountability.

06 LOGISTICS

A General Contractors job is stressful. With a laundry list of orders, materials, paperwork, trades and companies to organize, it can be extremely overwhelming.

Other factory construction options ship buildings volumetric leading to limited shipping range and expensive shipping rates.

our:solution

04 AUTOMATION & BASIC TRADES

With the depleting skilled trades workforce, our building method will rely on automation and require fewer trades, solving an industry wide and economic problem to keep up with our building needs.

05 LOW LABOUR COSTS

Installation and Assembly crews are kept small, reducing labour costs. Usually only needing 5 riggers, 2 carpenters, and 2 engineers to install a 5000 sqft building.

06 SIMPLE DELIVERY

Our module panel system is optimized for quick and easy delivery, shipped in a “flat-pack” panel configuration. Think IKEA, but for buildings. This results in lower transportation costs and longer range, simplified on-site traffic, and easy to manage site logistics. We are able to ship 1000km from our manufacturing facility without affecting our margins.

the:problem

07 HEALTH & SAFETY

Current construction sites are full of potential health and safety risks for workers resulting in workman's comp claims. On-Site construction leads to wasted labour for daily cleanup.

08 MATERIAL WASTE

In 2018 the U.S. produced 600 million tons of construction and demolition waste. Waste material hurts general contractors and developers margins.

09 UNSUSTAINABLE

Current construction methods result in large amounts of material waste and put a large strain on our environment and natural resources.

our:solution

07 SAFE & CLEAN

Prefabricated construction reduces exposure to high risk site conditions. Our building method eliminates the need for large construction tools, hazardous materials, and minimizes the need for elevated work requirements.

08 MINIMAL WASTE

Pre-manufacturing can reduce waste to landfill sites by over 80%. Due to our precision manufacturing process, little to no material waste is created on the job site or in off-site construction. Our buildings can be disassembled and repurposed, eliminating demolition. Less waste = better margins.

09 SUSTAINABLE BUILDINGS

Wood is a renewable resource and requires 70-90% less energy to convert vs steel and 94% less than aluminum.

our:technology

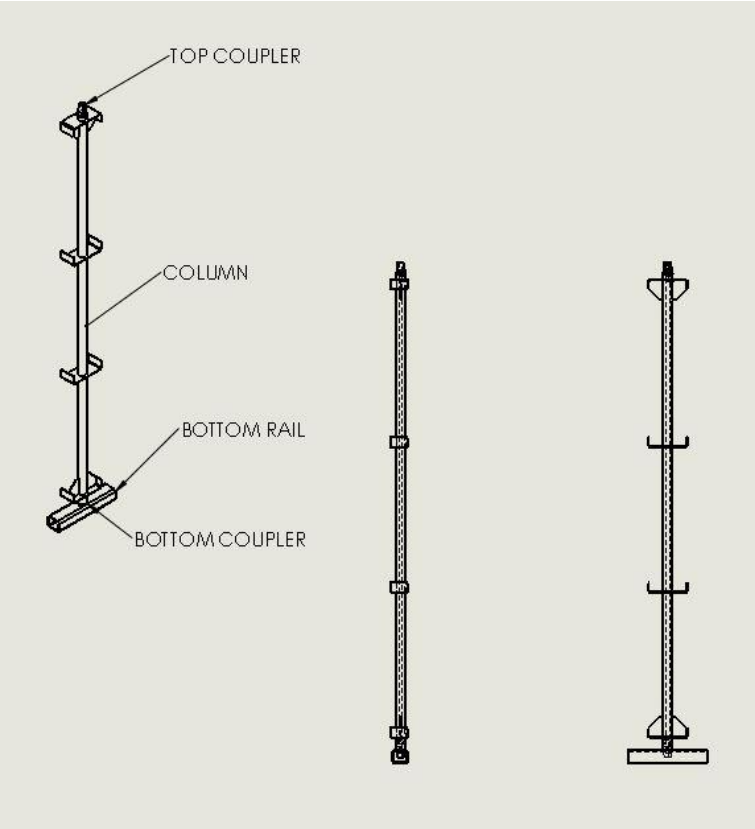

module:connect

PATENT PENDING CONNECTION SYSTEM

TECHNOLOGY

Our technology utilizes a patent pending post tensioning connection system referred to as the “Module Intersecting Connection System” (MICS)

CONNECTION

The MICS is integrated into engineered wood wall panels providing a cost effective and quick to install process, suitable for multi-level commercial and residential buildings.

PRECISE & SIMPLE

Using our partner ONSITE3D’s 3D LIDAR technology, the panels are aligned with precision on the foundation rail system. The assembly process is accurate, simple and extremely fast.

our:timeline

Based on a 5000sqft building

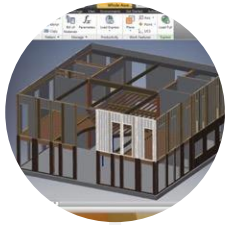

ARCHITECT PLANS

The clients architect submits their building plans. Our algorithms and engineers input the plans into manufacturing software.

1 Week

MANUFACTURING

Our manufacturing CNC lines build the clients building 50% faster than current construction methods. It also saves up to 80% in material waste compared to traditional construction.

2 Weeks

DELIVERY

The panels shipped in a flat-pack system are delivered to the job site for assembly.

1 Week

ASSEMBLY

The GC assembles the modular panels on site. Finishing touches such as flooring, bathrooms, and kitchens are installed.

1-4 Weeks

COMPLETION

Within 2 months, a 5000 sqft building has been manufactured, delivered, assembled, and the keys handed to the client.

manufacturing:process

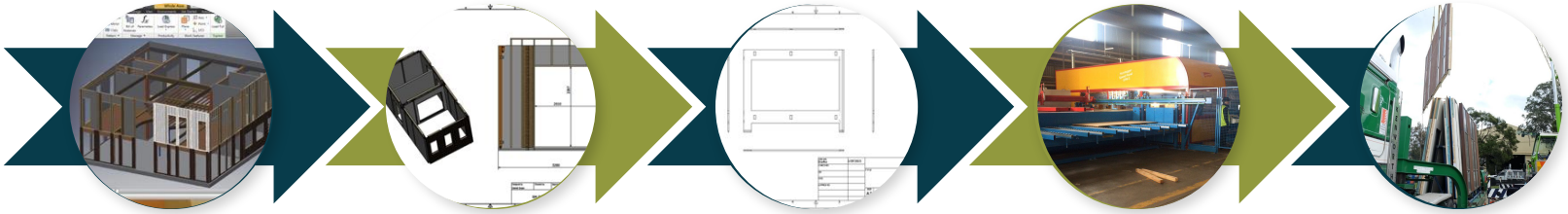

BIM Modeling

Manufacturing & Assembly Drawings

CNC Shop Drawings

CNC Machining

Building Delivered

projected:manufacturing

MODULE BUILDING SYSTEMS INC.

Projected Manufacturing Production Table

Facility Size (square feet)	Shifts	Total ouput per month	Totals at Full Capacity	Phase III Efficiency Adds 5%	Phase IV Efficiency Adds 5%	Phase V Efficiency Adds 5%
One CNC Router						
50,000	1	11,500	138,000	151,800	163,944	173,781
50,000	2	23,000	276,000	303,600	327,888	347,561
50,000	3	34,500	414,000	455,400	491,832	521,342
Two CNC Routers						
60,000	1	20,700	248,400	273,240	295,099	312,805
60,000	2	41,400	496,800	546,480	590,198	625,610
60,000	3	62,100	745,200	819,720	885,298	938,415

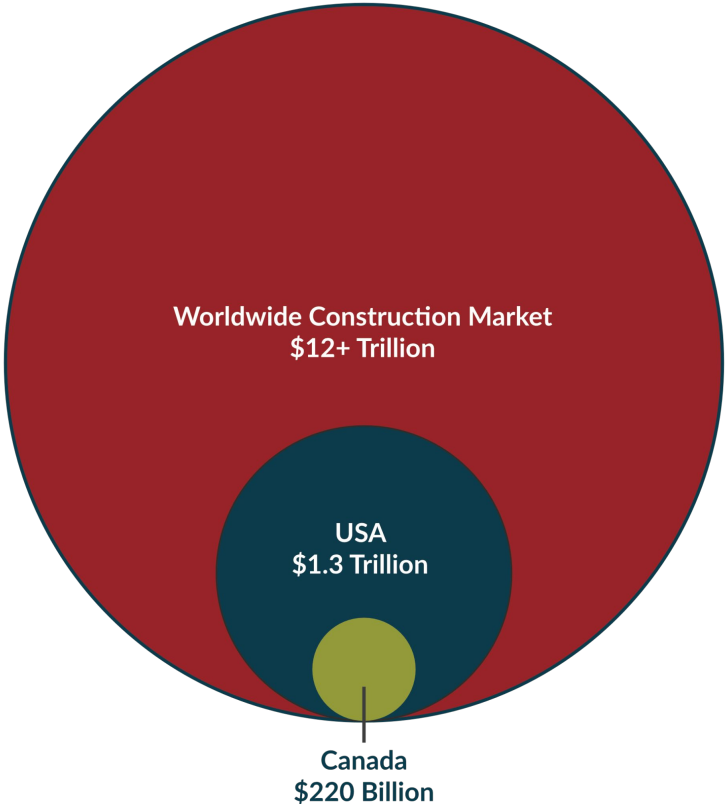

target:markets

The MBS post-tensioned technology has been specifically designed to support a large market segment comprising the 2-12 storey wood construction buildings for such applications as low income housing, affordable housing, multi-residential, hotels, student and senior housing facilities, and commercial office buildings.

secondary:markets

MBS' panelized system can be used for temporary structures and buildings, as our connection system allows our buildings to be easily disassembled and stored for later use.

Secondary markets include: Movie production companies for set and stage design, music festivals for stage design and festival amenities, temporary homeless shelters, and disaster relief efforts. MBS' buildings can easily be disassembled, stored, and shipped to any location to provide emergency shelter for those in need.

market:potential

MBS's technology allows the design process to be flexible and customizable separating us from the existing modular construction competitors.

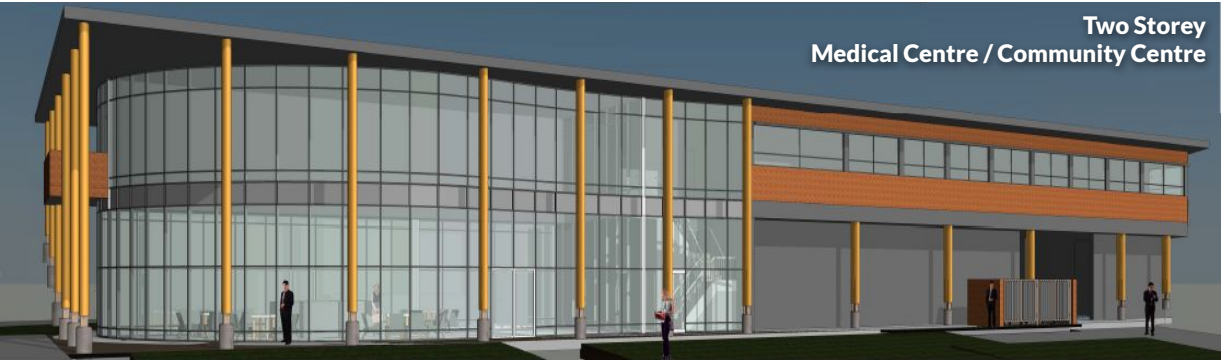

our:traction

canada

- MBS has secured a partnership with Ecora, a multifaceted engineering firm that is going to provide all engineering services to certify and endorse our building method and technology. They will create a sales pipeline for development projects.

- MBS has secured a partnership with ONSITE3D. ONSITE3D is heavily vested in the current market disruption utilizing Virtual Design Construction as the new industry standard of how projects are completed in the Oil and Gas sector. At the backbone of the company, they strive to be Western Canada's and North America's premier source for 3D LIDAR data.

- MBS is currently in business discussions with Glacier Holdings, a multi-million dollar property management and development company. Glacier Holdings has a large plot of land in the Bow Valley, AB area, and are at the early stages of evaluating a future modular development on the land position. MBS is currently working on a potential business arrangement for to develop their plot of land for our MVP/showcase project.

united states

- MBS is has secured a partnership with TriStar & Green Light Rural Developments. They are interested in bringing MBS to Memphis, TN to establish our HQ there. The founder and director, James Lee Witt is the former director of FEMA and former White House Cabinet Member under Bill Clinton. He sees this technology as a solution for temporary structures for disaster relief efforts.

- MBS has an LOI pending with Ocutt Winslow to become our design house partner. They are a national top 100 architectural with HQ's located in Tennessee, Texas, and Arizona.

- MBS has an LOI pending on approval from their board of directors for MBS' pilot project in partnership with Sweetbio to build their manufacturing facility in Memphis, TN.

- MBS has an LOI pending with the MDHA, The Nashville Metropolitan Development And Housing Agency. The MDHA needs to review our technology and assembly methods before executing the LOI.

business:strategy

MBS IS HERE

FORMATION

01

Build out revenue model, COGS, costing model, business plan, manufacturing plans, and design MBS' IP.

File our IP with the USPTO. Complete further testing and R&D.

Secure key partnerships with engineering firms and developers.

FUNDING & PILOT PROJECT

02

Secure seed funding.

Identify & Secure a pilot project and outsource the pilot to local manufacturers.

Complete the pilot project with our established partners.

Gain market and industry acceptance.

MANUFACTURING FACILITY

03

Setup MBS' manufacturing facility with the latest CNC technology using LEAN manufacturing principles.

OPTIMIZE & MAXIMIZE

04

With minimal additional capital and resources, the main objective is to continuously identify "weak links" in the process and find ways to solve and eliminate root causes. These could be related to equipment, lay-outs, product supply chain, employee training, management, market corrections, etc. MBS will continually improve it's manufacturing process.

SCALE & NEW INNOVATIONS

05

As MBS' sales grow, we plan to scale and open additional manufacturing facilities in strong targeted markets.

MBS will continue developing and advancing new systems and IP that unify and simplify the manufacturing and construction processes.

MODULE BUILDING SYSTEMS INC.

FOUNDED APRIL 2019
INCORPORATED JAN 21 2021
BC1284343 Inc.

First Funds Financial Runway

$2,000,000 initial investment will provide MBS a runaway time of 12 months to finalize our patent filing, hire our extended team, complete R&D testing, complete our pilot project, and gain regulatory approval.

Financial Forecast

Our conservative financial forecast is completing 31.5 typical (25,909sqft) building projects by Year 5, generating revenue of

$146,902,507

projected:revenue
UNITED STATES

MODULE BUILDING SYSTEMS

31-Oct-21
3.2
5 Year Revenue Model

Production, Cost of Good Sold & Revenues

		Year 1	Year 2	Year 3	Year 4	Year 5
	Production Assumptions					
	Number of Typical Projects	0.34	1.0	5.0	10.0	15.0
	Average Project Area (ft2)	25909	25909	25909	25909	25909
	Annualized Production (ft2)	8809	25909	129544	259087	388631
	Gross Sales					
	Target Unit Sale pricing ($/ft2)	$ 180	$ 180	$ 180	$ 180	$ 180
TOTAL GROSS SALES	Annual	$ 1,585,614	$ 4,663,572	$ 23,317,858	$ 46,635,716	$ 69,953,575
	Monthly	$ 132,135	$ 388,631	$ 1,943,155	$ 3,886,310	$ 5,829,465
	Cost of Goods Sold (Production Variable Costs)					
	Avg Cost/ft2	$ 150	$ 140	$ 135	$ 130	$ 125
	Competitive Advantage Efficiencies	$ (14)	$ (13)	$ (12)	$ (12)	$ (11)
	Sub Total	$ 136	$ 127	$ 123	$ 118	$ 114
PRODUCTION COGS	Annual	$ 1,200,971	$ 3,296,782	$ 15,895,201	$ 30,612,980	$ 44,153,336
	Monthly	$ 100,081	$ 274,732	$ 1,324,600	$ 2,551,082	$ 3,679,445
GROSS PROFIT	Annual	$ 384,644	$ 1,366,789	$ 7,422,657	$ 16,022,737	$ 25,800,239
	Monthly	$ 32,054	$ 113,899	$ 618,555	$ 1,335,228	$ 2,150,020
	Gross Profit Margin	24%	29%	32%	34%	37%

projected:revenue
CANADA

MODULE BUILDING SYSTEMS

Production, Cost of Good Sold & Revenues

		Year 1	Year 2	Year 3	Year 4	Year 5
	Production Assumptions					
	Number of Typical Projects	0.10	1.0	5.0	10.0	15.0
	Average Project Area (ft2)	25909	25909	25909	25909	25909
	Annualized Production (ft2)	2591	25909	129544	259087	388631
	Gross Sales					
	Target Unit Sale pricing ($/ft2)	$ 300	$ 300	$ 300	$ 300	$ 300
TOTAL GROSS SALES	Annual	$ 777,262	$ 7,772,619	$ 38,863,097	$ 77,726,194	$ 116,589,291
	Monthly	$ 64,772	$ 647,718	$ 3,238,591	$ 6,477,183	$ 9,715,774
	Cost of Goods Sold (Production Variable Costs)					
	Avg Cost/ft2	$ 253	$ 253	$ 253	$ 253	$ 253
	Competitive Advantage Efficiencies	$ (11)	$ (23)	$ (23)	$ (23)	$ (23)
	Sub Total	$ 242	$ 230	$ 230	$ 230	$ 230
PRODUCTION COGS	Annual	$ 627,469	$ 5,957,757	$ 29,788,784	$ 59,577,568	$ 89,366,352
	Monthly	$ 52,289	$ 496,480	$ 2,482,399	$ 4,964,797	$ 7,447,196
GROSS PROFIT	Annual	$ 149,793	$ 1,814,863	$ 9,074,313	$ 18,148,626	$ 27,222,939
	Monthly	$ 12,483	$ 151,239	$ 756,193	$ 1,512,385	$ 2,268,578
	Gross Profit Margin	19%	23%	23%	23%	23%

MODULE BUILDING SYSTEMS INC.

our:contact

Thank you for considering our proposal. If you wish to see our business plan, revenue model, investment proposition, or any other technical information, please do not hesitate to reach out to one of our executive team members.

Sincerely,
The MBS Team

www.modulebuildingsystems.com

Mark Turnbull
Founder & CEO
mark@modulebuildingsystems.com
+1.250.258.4044

Anirudh Ravikumar
Chief Strategy Officer
ani@modulebuildingsystems.com
+1.571.723.2709

Lorne Henderson
Chief Technology Officer
lorne@modulebuildingsystems.com
+1.250.808.8202